TAP 115 & SAP 115

Nylon oil filler and air breather filler cap

TAP 115 GENERAL INFORMATION

Technical data

Air breathers & Filler plugs

Nylon oil filler and air breather filler cap
Flow rate up to 2150 l/min

TAP115 is a range of plastic large air breathers and filler caps for protection of the tank against the solid contamination contained into the air and filling of the fluid into the systems during the commissioning and maintenance procedures.
They are usually directly fitted on the tank.

Available features:
- Flanged connection, for a maximum flow rate of 2150 l/min
- Replaceable filter element.
- Fine cellulose and microfibre filtration, to get a good cleanliness level into the reservoir. Polyester media is an option for heavy environmental conditions (High humidity, sand ….)
- Visual clogging indicator
- Filling basket, to hold the coarse contamination contained into the fluid and to diffuse the fluid flow into the tank

Common applications:
- Hydraulic systems
- Mobile machines
- Industrial equipment

Flow rate Δp 0.02 bar

	Flow rate [l/min]	
Filtration rating	A03	L10
TAP115 length 1	1600	2000
TAP115 length 2	2150	2150

Materials
- Cover/flange: Nylon
- Filter element: Microfibre, Resin impregnate paper
- Seals: NBR, FPM
- Basket/screws: Galvanized steel

Clogging indicators
- Manual reset
- Set pressure 0.062 bar +/- 10%

Temperature
From -25 °C to +100 °C

Weight	Length 1	Length 2
TAP 115	0.46 kg	0.585 kg

Designation & Ordering code

COMPLETE BREATHER PLUG - TAP115

Configuration example : TAP115 | 2 | F | A03 | A | 1 | A | P01

Series and size
TAP115 Screwed flange connection

Length
1 | **2**

Connection to the tank
F Flange

Filtration rating
A03 Inorganic microfiber 3 µm
L10 Polyurethane 10 µm

Seals
A NBR
V FPM

Version
1 With basket

Clogging indicator
A Without indicator
B With visual clogging indicator

Execution
P01 MP Filtri standard
Pxx Customized

FILTER ELEMENT

Configuration example : A115 | 2 | A03 | P01

Filter element series and size
A115

Length
1 | **2**

Filtration rating
A03 Inorganic microfiber 3 µm
L10 Polyurethane 10 µm

Execution
P01 MP Filtri standard
Pxx Customized
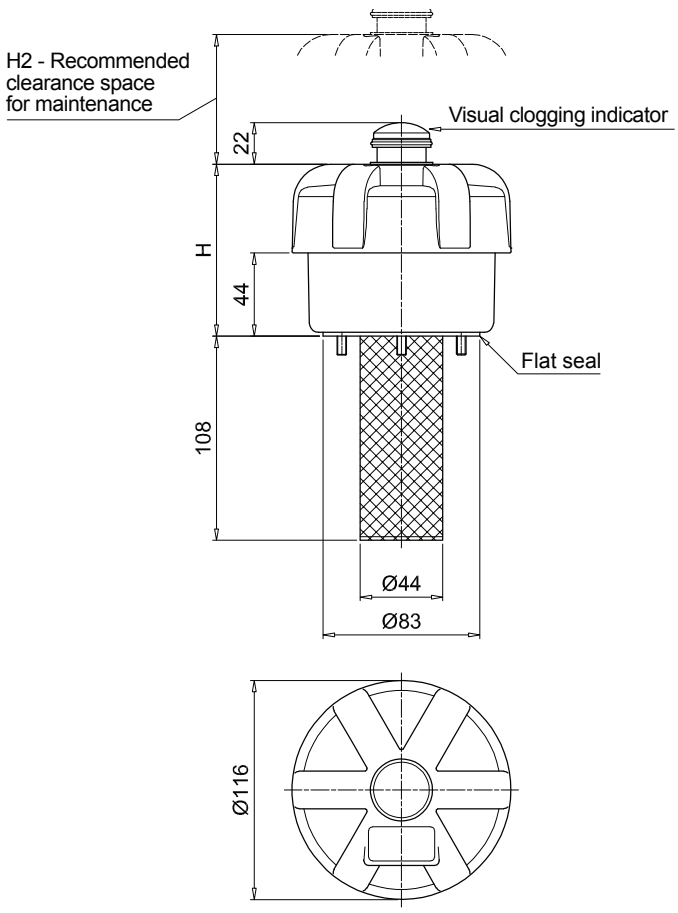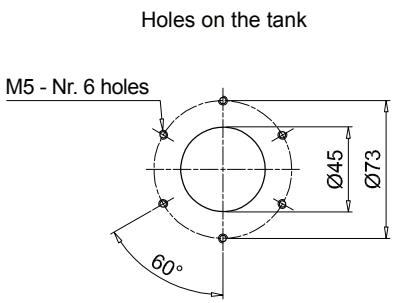
TAP115		
Length	**H [mm]**	**H2 [mm]**
1	91	55
2	155	80