Dimensions

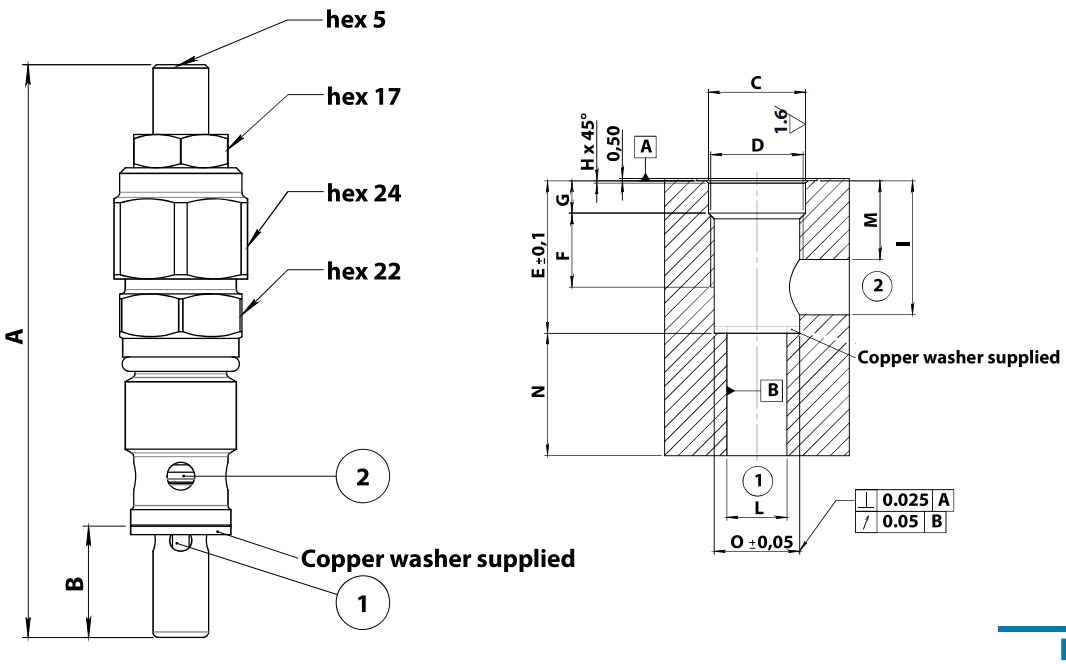

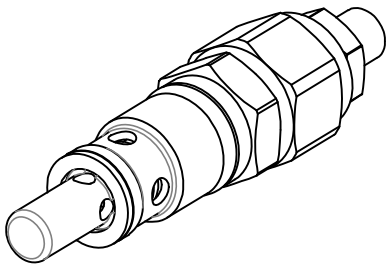

Hydraulic Symbol

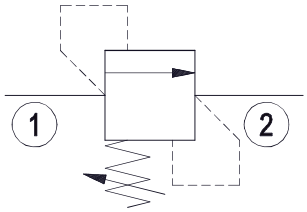

Size	A max	B	C	D	E	F	G	H	I max	L max	M max	N min	O min	Weight kg
35	103	20	21 H7	M20x1,5	33	16	7	0,5	29	13	17	20	18,5	0,16

Curves

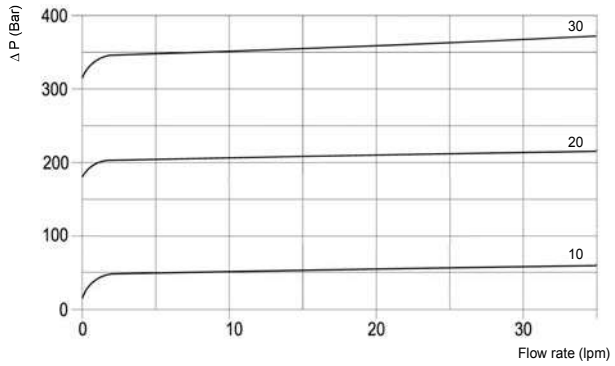

Features

Rated Flow	35 lpm
Max Pressure	350 bar
Installation Torque	45-50 Nm

Materials: Zinc plated steel cartridge, hardened steel inner parts.

Ordering Code

PRC 35	- -	-

	Spring (bar)
10	5-50
20	40-210
30	100-350

Adjustments		
A		Socket Screw
B		Handknob
C		Tamperproof Cap

Ordering Code Example: PRC3520A - 40-210 bar setting range, Socket screw adjustment.